SUPCO S-8018

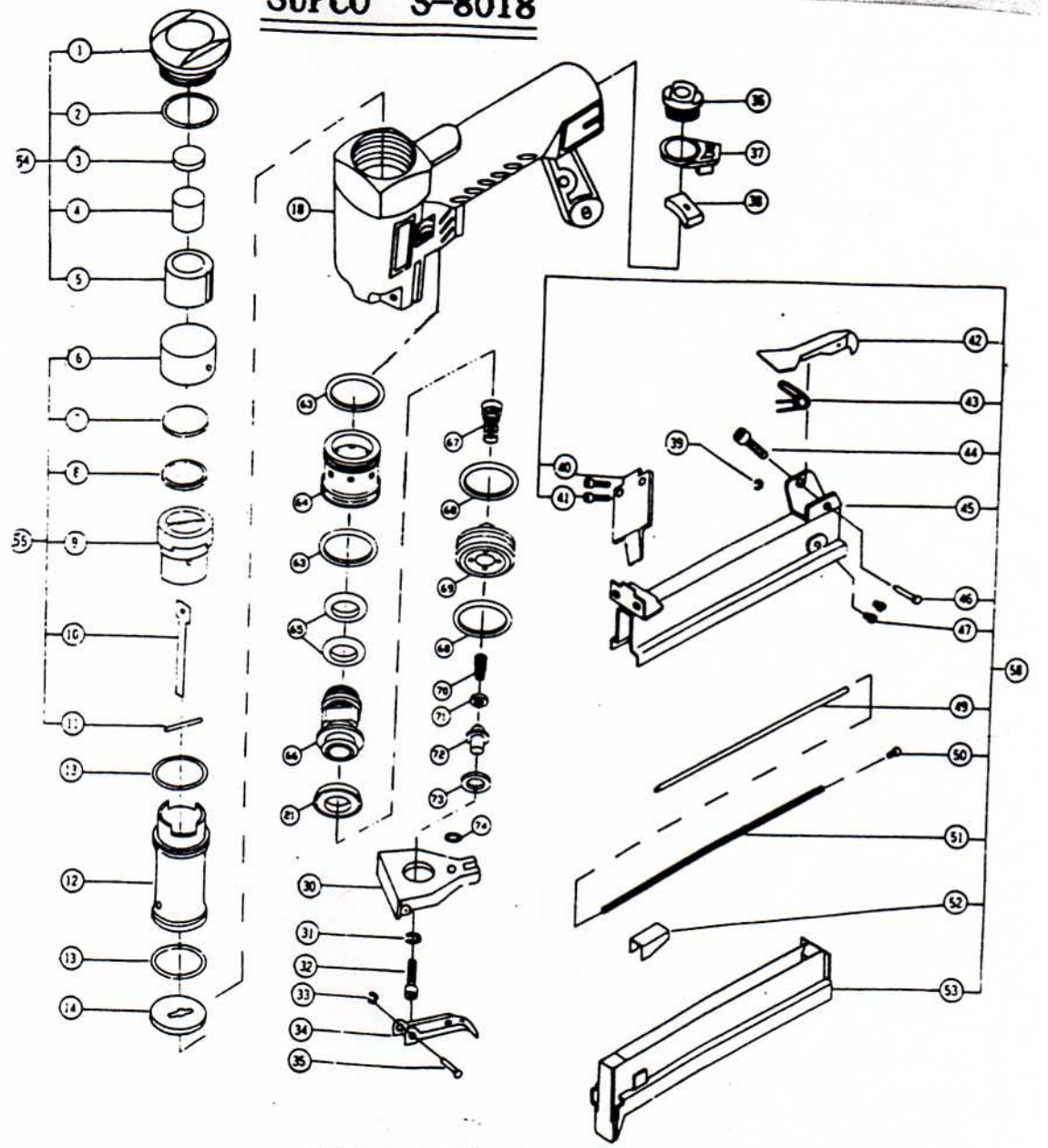

MODEL S-8018 PARTS LIST

01	CA-06	CAP
02	OR-47	O-RING
03	ES-11	DAMPER
04	CA-08	PISTON STOP
05	ES-12	CAP SIEEVE
06	PS-07	PISTOP COVER
07	ES-15	DAMPER
08	WS-22	BLADE STOP
09	BP-07	PISTON
10	DB-23	DRIVE BLADE
11	SM-24	PISTON PIN
12	CY-10	CYLINDER
13	OR-48	CYLINDER O-RING
14	BP-08	RETURN SEAL
18	BD-20	BODY
21	OR-51	VALVE CAP SEAL
30	ES-13	VALVE COVER
31	WS-02	WASHER
32	M4*10	SCREW
33	E-2.5	E-RING
34	TG-11	TRIGGER
35	SM-25	TRIGGER PIN
36	CA-07	AIR LNLET CAP
37	ES-14	EXHAUST COVER
38	SW-07	EXHAUST MESH
39	E-2.5	E-RING
40	FP-24	FRONT PLATE
41	M5*20	SCREW
42	FC-19	LATCH
43	SP-27	LATCH SPRINR
44	M5*14	SCREW

45	MZ-26	MAGAZINE COVER
46	SM-06	PIN
47	M3*4	SCREW
49	SM-26	ROD
50	M4*4	SCREW
51	SP-26	PUSHER SPRING
52	FD-20	PUSHER
53	MZ-27	MAGAZINE
54	CA-09	CAP ASSEMBLY
55	PS-44	PISTON & DRIVER ASSEMBIY
58	MZ-31	MAGAZINE ASSEMBLY
63	OR-60	O-RING
64	VS-25	OUT SWITCH II
65	OR-59	O-RING
66	VS-26	VALVE II
67	SP-33	SPRING
68	OR-58	O-RING
69	VS-24	SWITCH CAP
70	SP-32	VALVE PLUNGER SPRING
71	OR-57	O-RING
72	VS-23	VALVE PLUNGER II
73	WS-29	PLUNGER GUIDE
74	OR-08	O-RING